PH420

TECHNICAL DATA	PH420
Lifting capacity	41 KNM
Max. lifting height from crane base	6500 MM
Max. working slope	5°
Max. working pressure	220 BAR
Suggested oil flow	12 - 15 Ltrs p/min
Electro-hydraulic power unit supply voltage	24v
Hydraulic oil tank capacity (H version)	15 Ltr

CRANE WEIGHTS	KG
PH420 - Base with extendable stabilisers	555

DIMENSIONS

CRANE	A2	B2
PH420	1709	1214

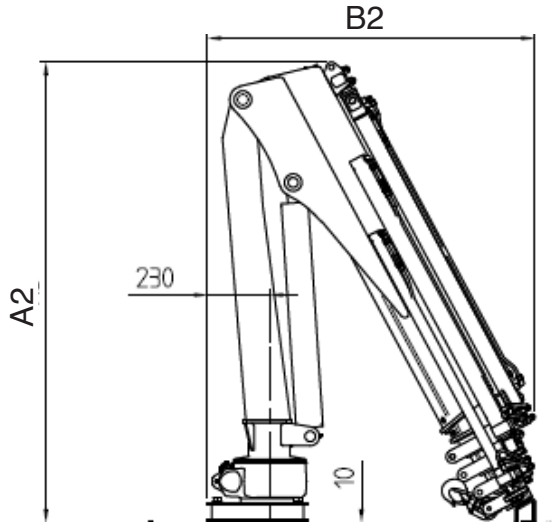

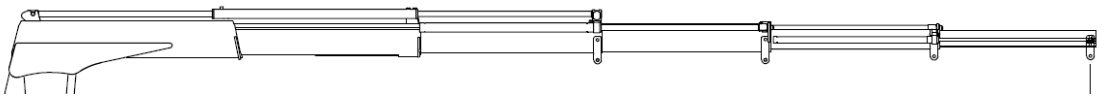

MM	1670	2770	3870	4870	5870	6800
KG	2550	1500	1050	830	690	600



Penny Engineering Limited

Station Road I Clowne I Chesterfield I Derbyshire I S43 4AB I UK

T +44 (0) 1246 811475 I **F** +44 (0) 1246 810403

www.pennyengineering.com I sales@pennyengineering.com